18 24

HS FRENCH FLINT

THE GLASS CONTAINER SPECIALISTS

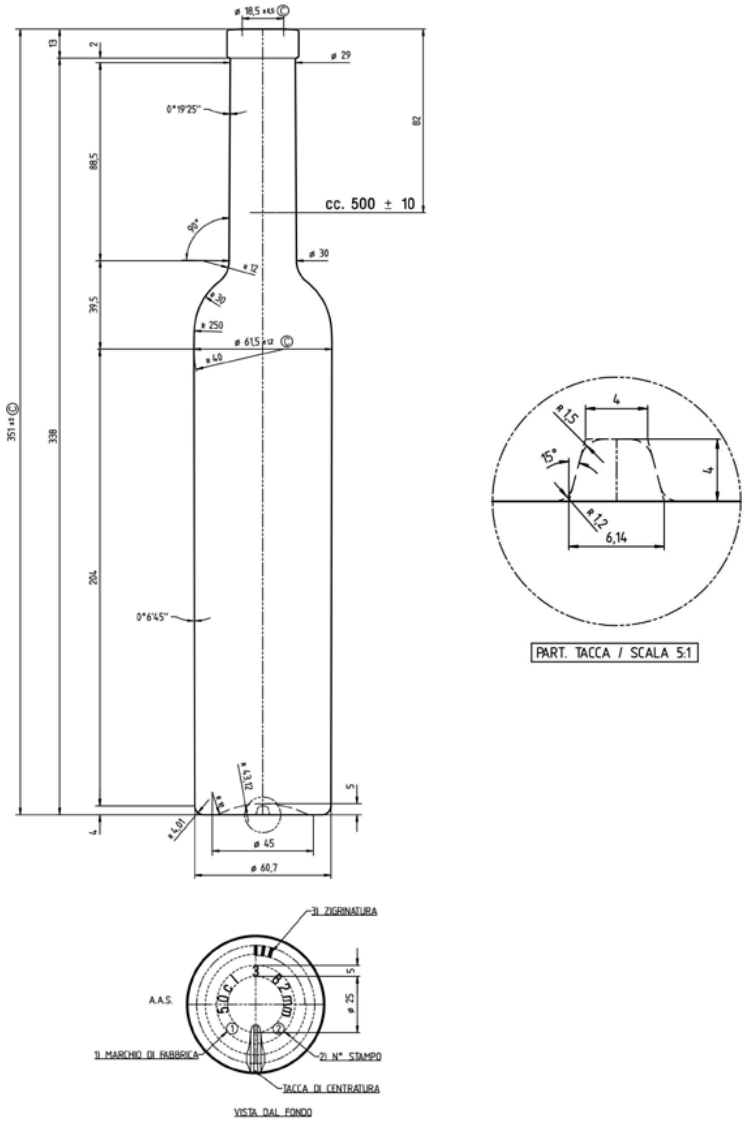

500ML ALFA LEGARA GLASS BOTTLE

Product code	ALFA500RB
Finish	19.5mm Cork Mouth
Capacity	500ml
Brim-full capacity	525ml